ALUTRUSS Traverse 4 voies QL-ET34-1500 QUADLOCK

Système de traverses 4 points

Réf. : 60306756

GTIN: 4026397501681

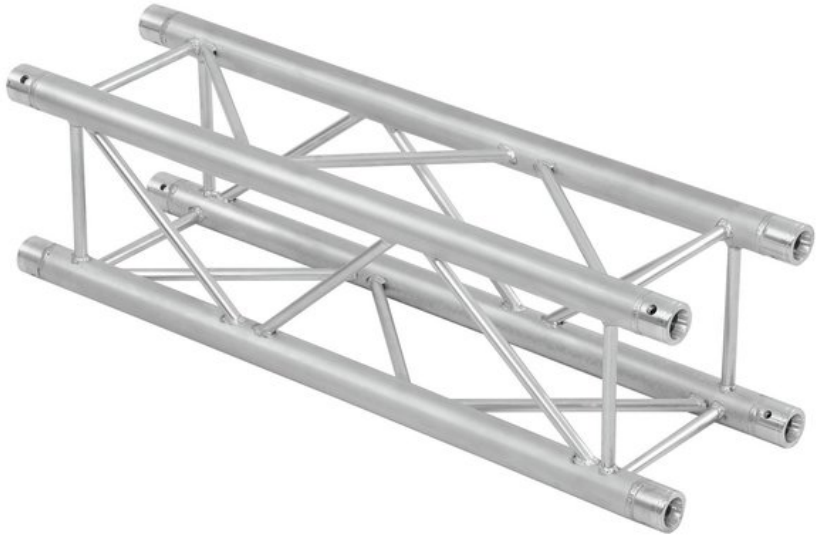

Prix de catalogue: 291.55 €

TVA 19% incl.

Description:

QUADLOCK QL-ET34 4-point truss system
QUADLOCK QL-ET34 is a 4-point truss system made of aluminum. The individual elements are connected via four cones, pivots and pins. QUADLOCK QL-ET34 is made of EN-AW 6082 T6 (AlMgSi1 T6) alloy for even higher loads.

The advantage of the conical connection system is that the cones completely fit into the main chords so that highest load capacity is guaranteed. The Quick-Lock system enables fast, efficient and highly aesthetic assembly when the truss constructions are frequently assembled and dismantled.

The four main chords are made of 50 mm aluminum tube with 2 mm wall thickness and offer a good relation between strength and weight. The braces have a diameter of 20 mm with 2 mm wall thickness and provide stability for this truss system.

With 290 mm outer dimensions, QUADLOCK QL-ET34 is a stable truss system for higher loads and extended durability. This system is mainly designed for intense use in stage installations, fair installations, event installations but also for permanent installations in discotheques and theatres.

Its polished surface makes this universal system a real eyecatcher. Due to its wide range of standard system lengths, corners and accessory, this system is highly versatile and offers unlimited design possibilities.

The production of this truss system is TUV-monitored. The load table as calculation base can be downloaded from the Internet before buying the product! ALUTRUSS elements are made in Europe and welded by specially trained welders certified by the German SLV association.

Please note: this truss system must never be combined with other systems!

Logistique

EAN / GTIN: 4026397501681
Poids: 10,40 kg
Longueur: 1.51 m
Largeur: 0.30 m
Hauteur: 0.30 m
Article encombrant

Eurolite®, Futurelight®, PSSO®, Roadinger®, Alutruss®, Europalms® et Dimavery® sont des marques de Steinigke Showtechnic GmbH, Andreas-Bauer-Straße 5, DE-97297 Waldbüttelbrunn
Tous droits réservés. Sous réserve de modifications techniques et d'erreurs. Toutes les photos sont similaires, les illustrations le sont en partie.

Caractéristiques:

- Alliage solide EN-AW 6082 pour une grande capacité de charge
- Tubes en aluminium de haute qualité de 50 mm de diamètre
- Poids réduit
- Distance entre les centres de trou : 240 mm
- Montage facile
- Tube porteur: 50 mm
- Made in Europe
- Pour des domaines d'application tels que: Théâtre; Agencement de salons et magasin; Clubs/Écoles de danse
- Vous trouverez de plus amples informations sur ce produit dans la rubrique « Téléchargements » de la fiche technique

L'étendue des fournitures

- 1 x set de connecteurs

Données techniques:

Construction:	Montage facile
Tube porteur:	50 mm x 2 mm
Procédé de soudure:	Impulsion WIG
Matière de soudure:	AlMg 5
Matériau du tube:	AlMgSi1 T6
Couleur:	Couleurs alu
Dimension:	Longueur : 1,5 m Largeur : 29 cm Hauteur : 29 cm
Poids:	9,3 kg

Eurolite®, Futurelight®, PSSO®, Roadinger®, Alutruss®, Europalms® et Dimavery® sont des marques de Steinigke Showtechnic GmbH, Andreas-Bauer-Straße 5, DE-97297 Waldbüttelbrunn
Tous droits réservés. Sous réserve de modifications techniques et d'erreurs. Toutes les photos sont similaires, les illustrations le sont en partie.