LED COB 150W 8000K LED SL-160 Search Light (GT-FC150X3-1.1)

Art. No.: E6520041

GTIN: 4026397715132

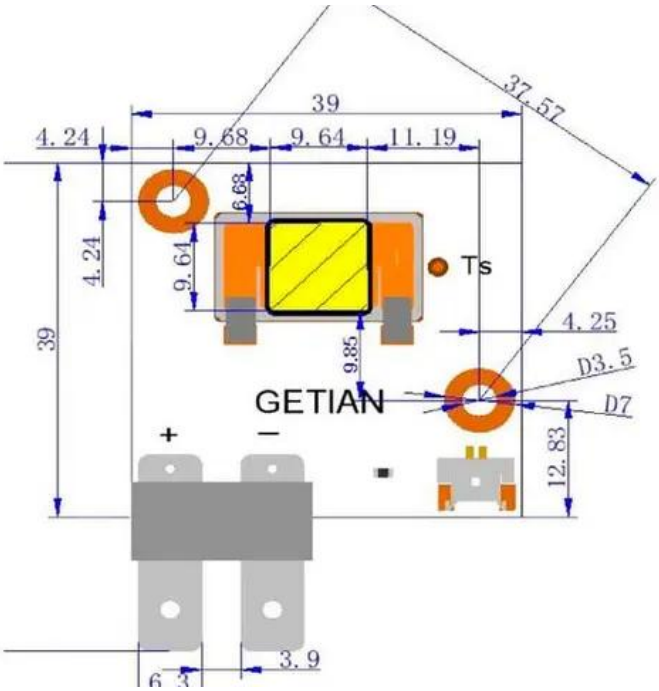

Features:

Technical specifications:

Weight:	0.04 kg

Scope of delivery:

Logistic

EAN / GTIN: 4026397715132

Weight: 0,04 kg

Length: 0.06 m

Width: 0.04 m

Heigth: 0.01 m

Eurolite®, Futurelight®, PSSO®, Roadinger®, Alutruss®, Europalms® and Dimavery® are trademarks of Steinigke Showtechnic GmbH, Andreas-Bauer-Straße 5, DE-97297 Waldbüttelbrunn
All rights reserved. Subject to change without notice. Errors and omissions excepted.Illustration only. Actual item may differ from photo.