LED QCL 7W BRPG LED Party Panel RGB+UV (TX-BRPG2B140-001)

Art. No.: E6510815
GTIN: 4026397677751

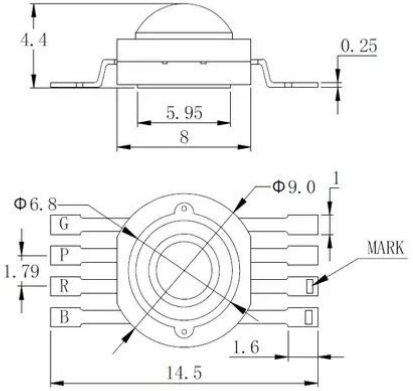

All rights reserved. Subject to change without notice. Errors and omissions excepted.
Illustration only. Actual item may differ from photo.

LED QCL 7W BRPG LED Party Panel RGB+UV (TX-BRPG2B140-001)

Art. No.: E6510815
GTIN: 4026397677751

Features:

All rights reserved. Subject to change without notice. Errors and omissions excepted.
Illustration only. Actual item may differ from photo.