ALUTRUSS BE-1F4 leg clamp (4 legs)

Art. No.: 80702776
GTIN: 4026397629170

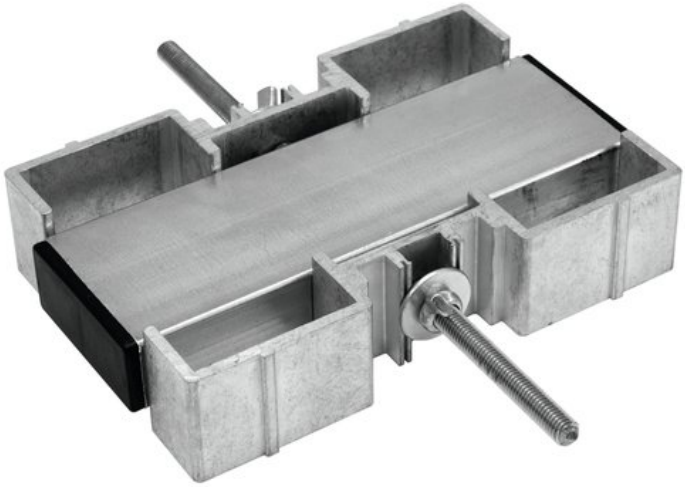

List price: 34.51 €

incl. 19% VAT.

Features:

- Made in Europe

Technical specifications:

Attachment system:	60 mm x 60 mm
Dimensions:	Length: 21,5 cm Width: 28 cm Height: 4,5 cm
Weight:	1,04 kg

Logistic

EAN / GTIN: 4026397629170
Weight: 1,18 kg
Length: 0.29 m
Width: 0.23 m
Heigth: 0.06 m

Eurolite®, Futurelight®, PSSO®, Roadinger®, Alutruss®, Europalms® and Dimavery® are trademarks of Steinigke Showtechnic GmbH, Andreas-Bauer-Straße 5, DE-97297 Waldbüttelbrunn
All rights reserved. Subject to change without notice. Errors and omissions excepted.Illustration only. Actual item may differ from photo.