Materials used:

Alloy	EN-AW 6082 T6 (AlSi1MgMn)
Main chords	50 x 2 mm
Braces	20 x 2 mm
Accessory/truss	4 x connecting cone, 8x pivot, 8x pin
Item No.	6030198D

Load table TQ390:

Span (m)	Point load (kg)	Deflection (mm)	UDL (kg/m)	Deflection (mm)
2	1664	1,4	1664	1,7
4	832	5,8	416	7,0
6	555	12,5	185	15,7
8	416	22,3	104	27,8
10	332	34,8	66	43,5
12	277	50,1	46	62,6
14	238	68,2	34	85,2
16	208	89,1	27	111,3

Maximum system-length: 16 meters

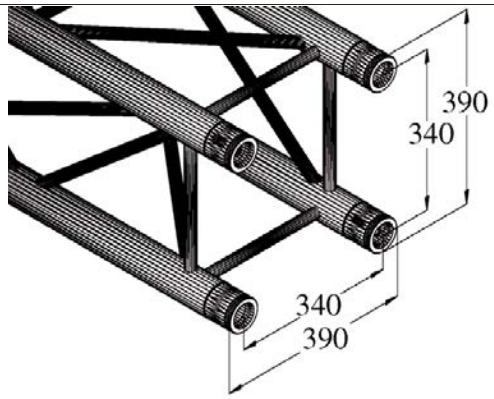

including connecting cone

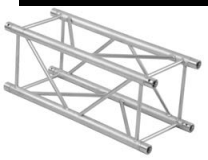

No. 60306010 ..... TQ390-500
No. 60306015 ..... TQ390-1000
No. 60306020 ..... TQ390-2000
No. 60306025 ..... TQ390-2500
No. 60306030 ..... TQ390-3000
No. 60306035 ..... TQ390-4000
No. 60306040 ..... TQ390-5000

TQ-390

ALUTRUSS QUADLOCK TQ390 4-Way Cross Beam

No. 60306070

ALUTRUSS QUADLOCK TQ390-QQC21 2-Way-Corner 90°

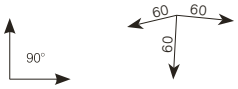

No. 60306080

ALUTRUSS QUADLOCK TQ390-QQL30 3-Way-Corner 90°

No. 60306085

ALUTRUSS QUADLOCK TQ390-QQT35 3-Way T-Piece

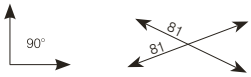

No. 60306087

ALUTRUSS QUADLOCK TQ390-QQT41 4-Way Cross Piece

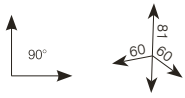

No. 60306088

ALUTRUSS QUADLOCK TQ390-QQT42 4-Way T-Piece

No. 60306095

ALUTRUSS QUADLOCK TQ390-MCB Universal Crossing

No. 6030609A

ALUTRUSS QUADLOCK TQ390-BP Base Plate