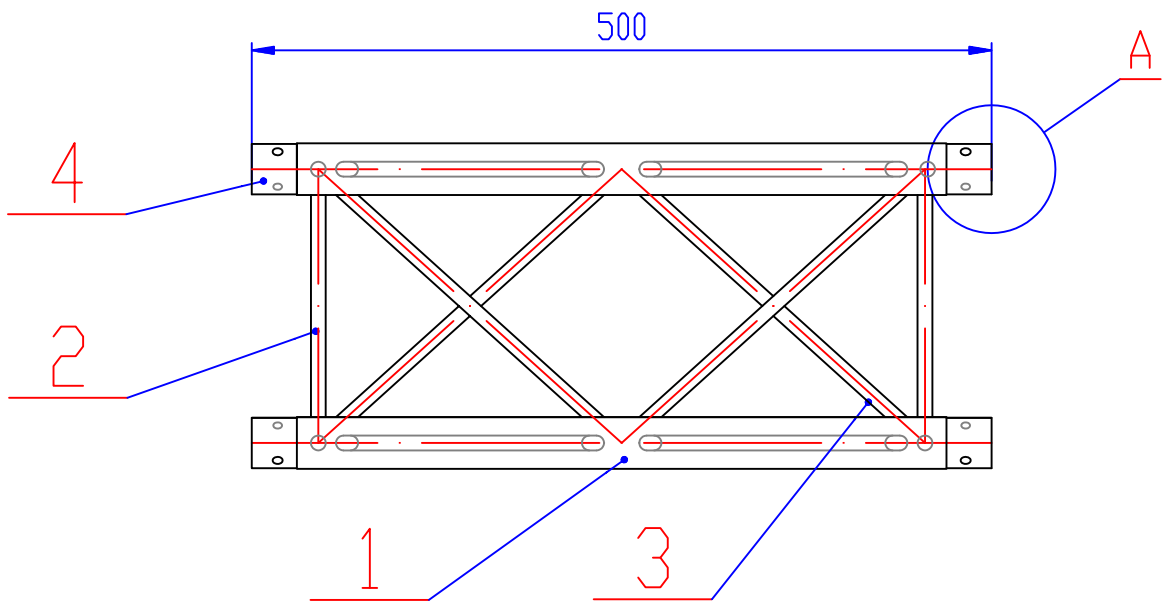

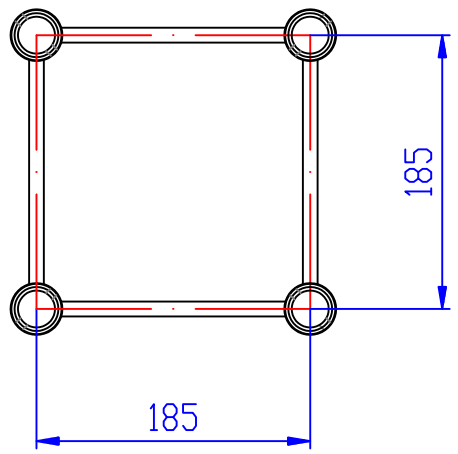

DETAIL A
1:2

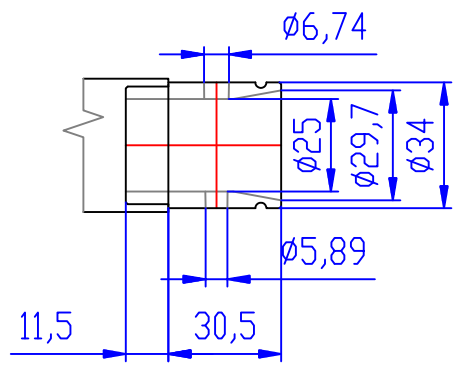

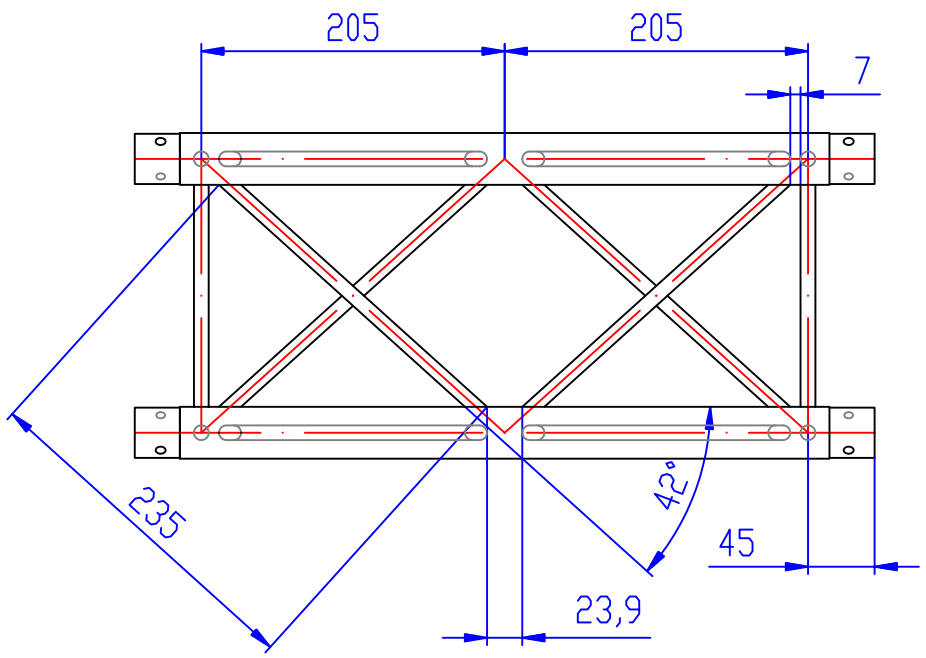

Pos.	Semi-product, Norm	Alloy	pcs	Weight (kg)
1	TR KR 35x2 - 439 EN 755-8	EN AW-6060 T66-EN 573-3	4	
2	TR KR 10x2 - 150 EN 755-8	EN AW-6060 T66-EN 573-3	8	
3	TR KR 10x2 - 235 EN 755-8	EN AW-6060 T66-EN 573-3	8	
4	TR KR 35x5 - 42 EN 755-8	EN AW-6060 T66-EN 573-3	8	

Scale 1:5

	Date	Name
Work.		
Check.		
Stand.		

DQ4-500 -1

Page

Pg.

No..	Change	Date	Name