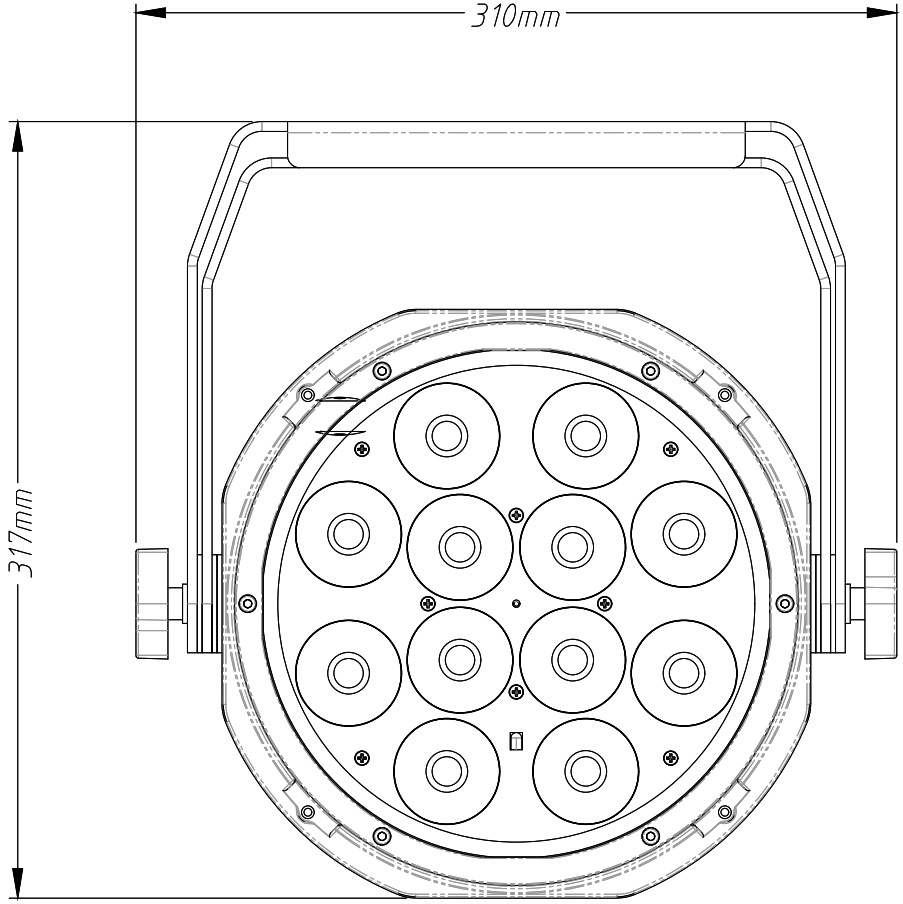

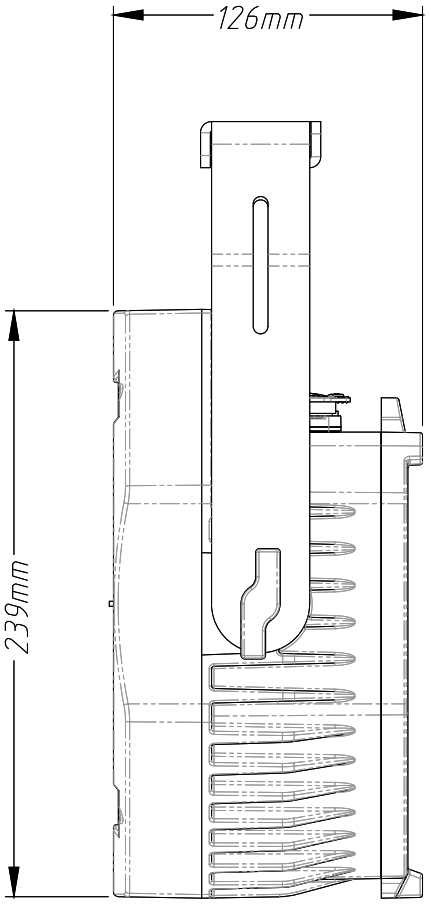

PRODUCT: IP PRO Slim 12x15W RGBL	No: 51914281
DOCUMENT: Dimensions in mm	VERSION: 1

eurolite®
Eurolite is a brand of Steinigke Showtechnic GmbH
Andreas-Bauer-Str. 5 · 97297 Waldbüttelbrunn, Germany
info@steinigke.de · www.steinigke.de/support