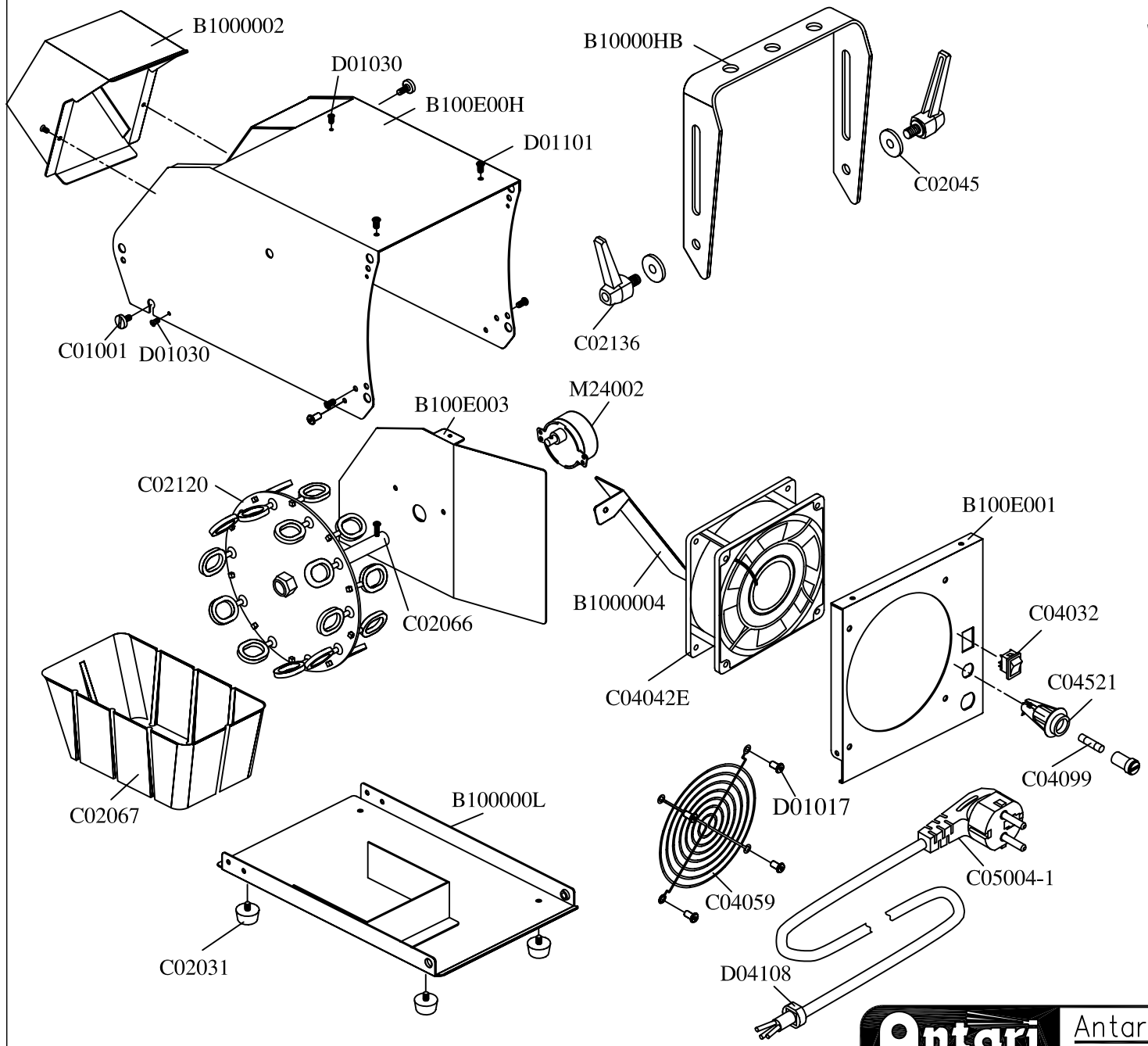

SPARE PARTS OF B-100 (230V)

B100000L	Steel Case /Base
B100E00H	Steel Case/Cover
B10000HB	Yoke
B100E001	Controller Case
B1000002	Spout
B100E003	Motor plote
B100E004	Diversion Case
C01001	M4x10L Screw
C02031	Foot
C02045	Washer
C02120	Bubble Wheel Ring
C02136	Tightenihg Screw
C02066	Bubble Wheel Axle
C02067	Prough
C04032	Rocker Switch/Power(Red)
C04042E	Fan
C04059	Guardrail
C04099	Fuse(T1A/250V)
C04521	Fuse Holder
C05004-1	Cable & Plug
D01017	Guardrail Pin
D01030	M3x6L Screw
D01101	M4x8L Screw
D04108	Power Cord Support
M24002	Motor

Antari FOG MACHINE

Antari Lighting And Effects Ltd.

DwgNo.B100-001(NOPC) MAR20'02 By YEAN.