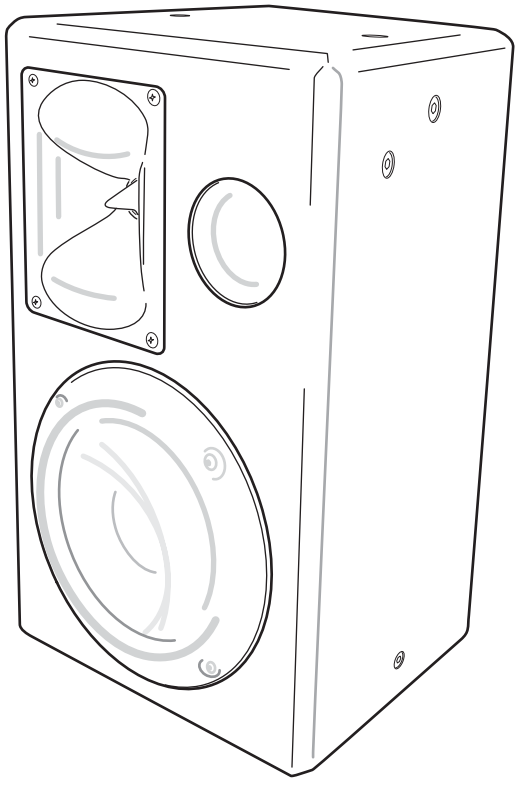

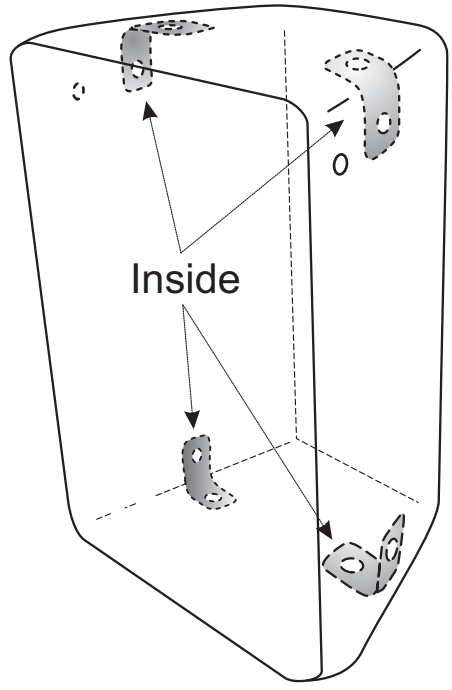
0
Inside

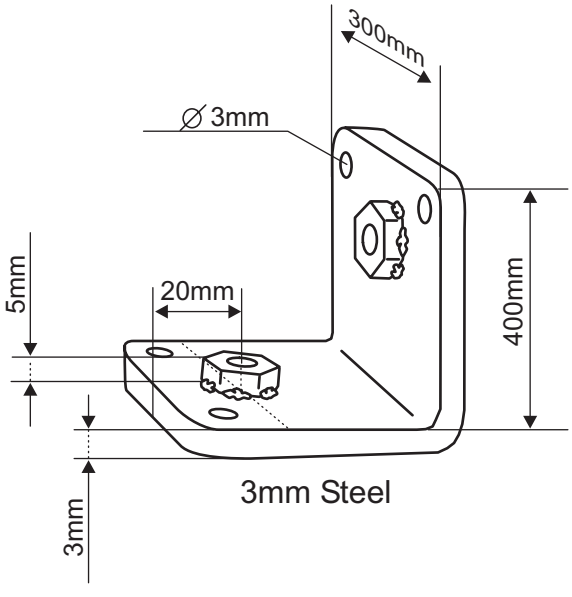
300mm
∅ 3mm
5mm
20mm
400mm
3mm
3mm Steel

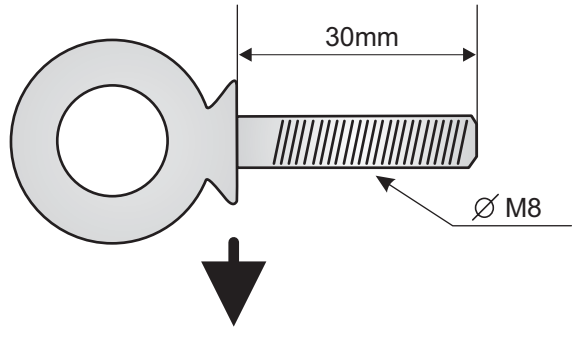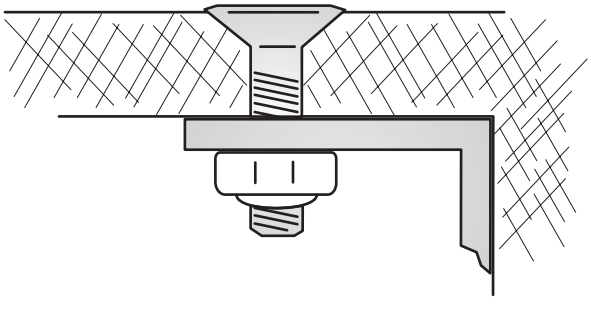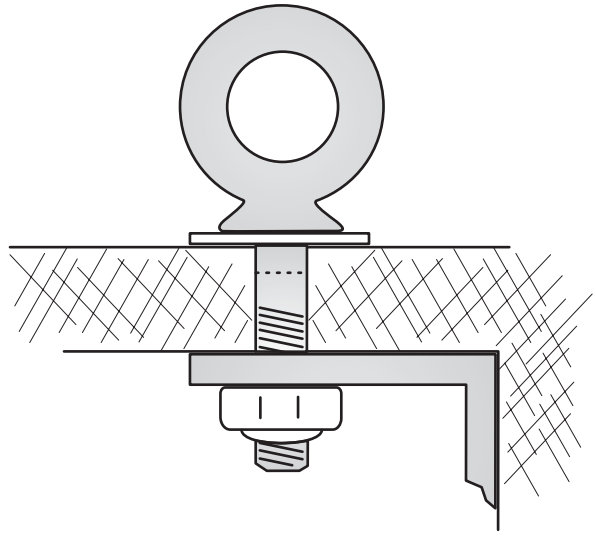
30mm
∅ M8