15 BANDS EQ

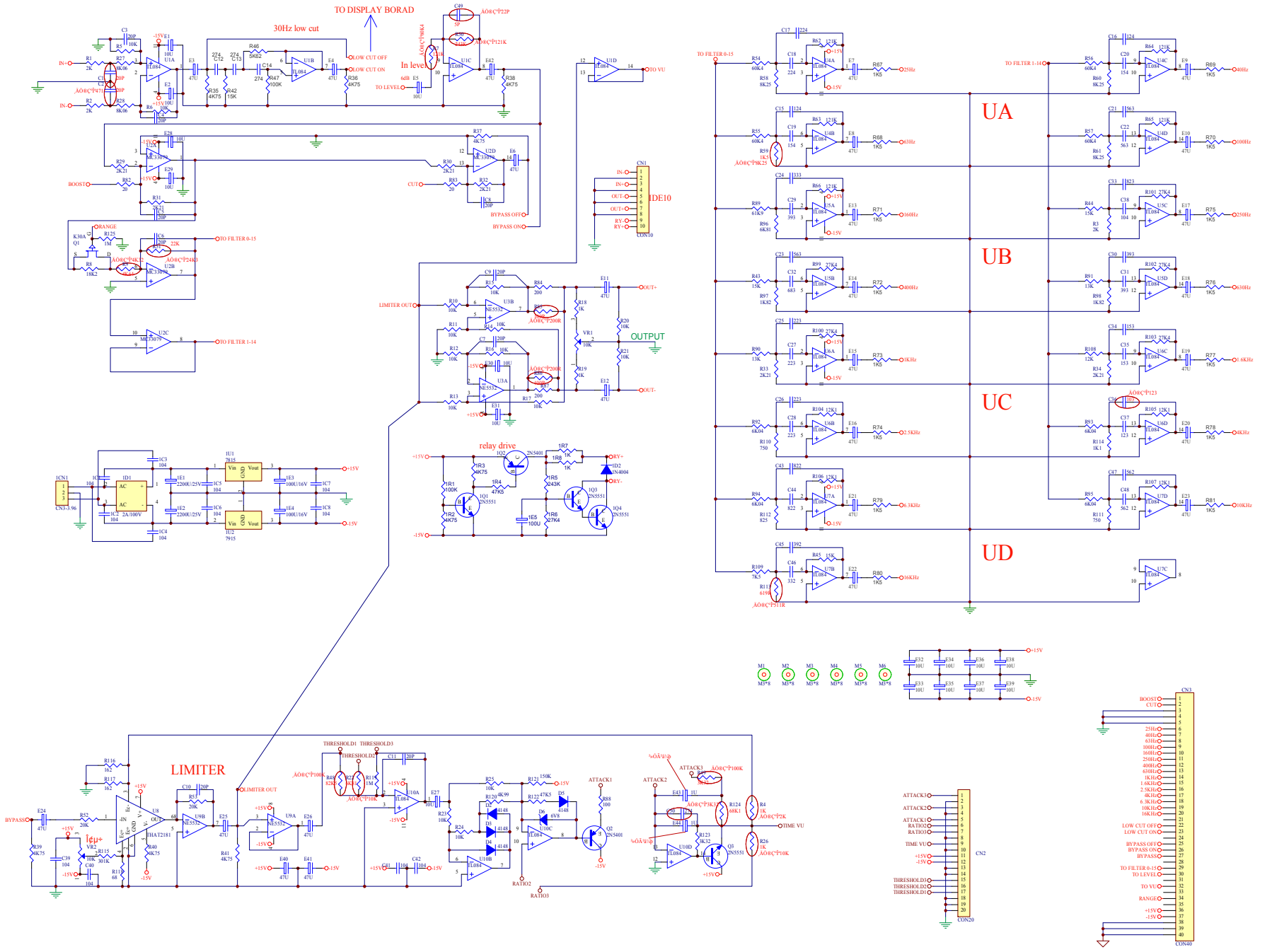
TO DISPLAY BORAD
30Hz low cut
LOW CUT OFF
LOW CUT ON
In level
TO LEVEL
TO VU
BOOST
CUT
BYPASS OFF
BYPASS ON
TO FILTER 0-15
TO FILTER 1-14
LIMITER OUT
OUTPUT
IDE10
CON10
relay drive
UA
UB
UC
UD
LIMITER
THRESHOLD1
THRESHOLD2
THRESHOLD3
ATTACK1
ATTACK2
ATTACK3
RATIO2
RATIO3
TIME VU
CN2
CON20
CN3
CON40

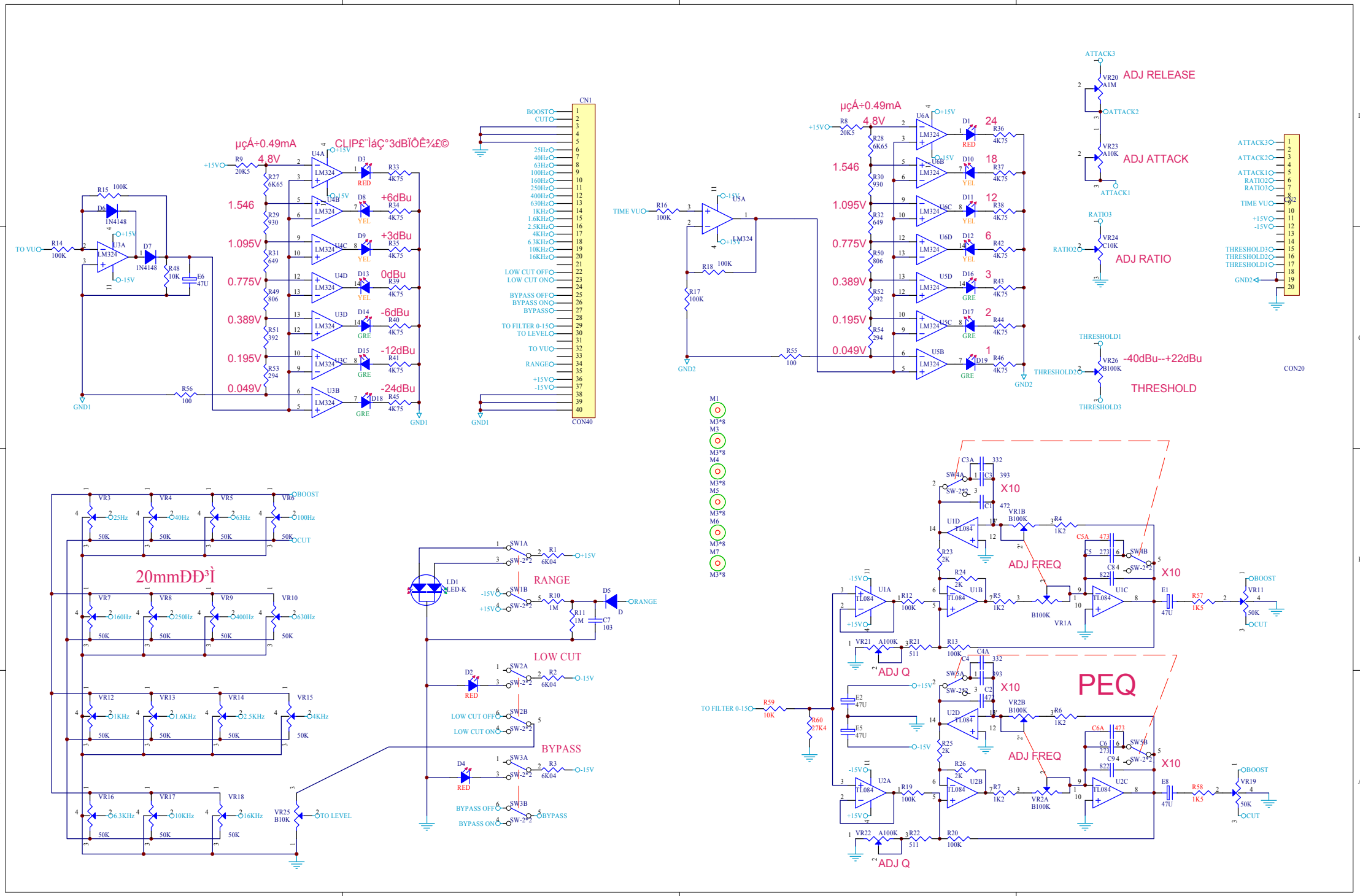
µçÁ÷0.49mA
CLIPÊ¨ÌáÇ°3dBÏÔÊ¾£©
4.8V
1.546
1.095V
0.775V
0.389V
0.195V
0.049V
+6dBu
+3dBu
0dBu
-6dBu
-12dBu
-24dBu
TO VU
TIME VU
CN1
CON40
CON20
ADJ RELEASE
ADJ ATTACK
ADJ RATIO
THRESHOLD
-40dBu--+22dBu
20mmÐÐ³Ì
RANGE
LOW CUT
BYPASS
X10
ADJ FREQ
ADJ Q
PEQ
TO FILTER 0-15
TO LEVEL
GND1
GND2